Cooperative Communications in *Ad Hoc* Networks --- The Art of Channel Recycling

Biao Chen
Syracuse University
Department of Electrical Engineering and Computer Science
Syracuse, NY 13244

Collaborators: Bin Liu, Qi Cheng,
Pramod K. Varshney, Peter K. Willett

Outline

- Problem statement
  - When are the communications (channels) useless?
- The art of recycling
  - How to make useless channels useful again?
  - Fundamental performance limits due to the channels.
- How do we use the channels?
  - Collaborative signaling for sensory and ad hoc networks --- a clairvoyant study using joint source channel coding.
- Where do we go from here?

KEY: We assume a finite-alphabet source.

Cooperative communication in Ad Hoc Networks

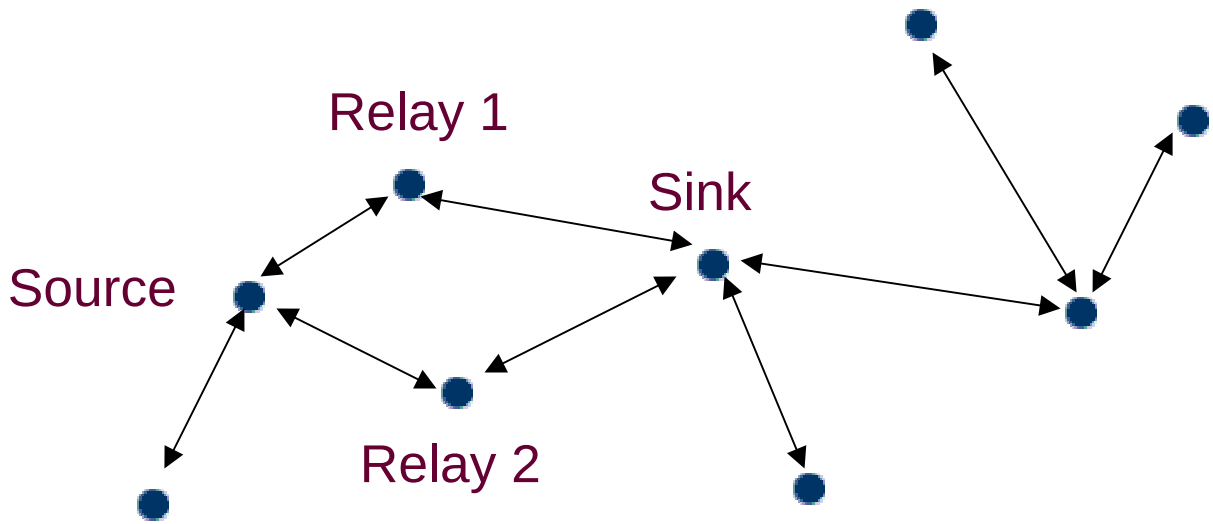

- Power (range) limited (energy constraint, LPI/LPD).
- Interference limited.
- Constant link breakdown.

Problem Statement

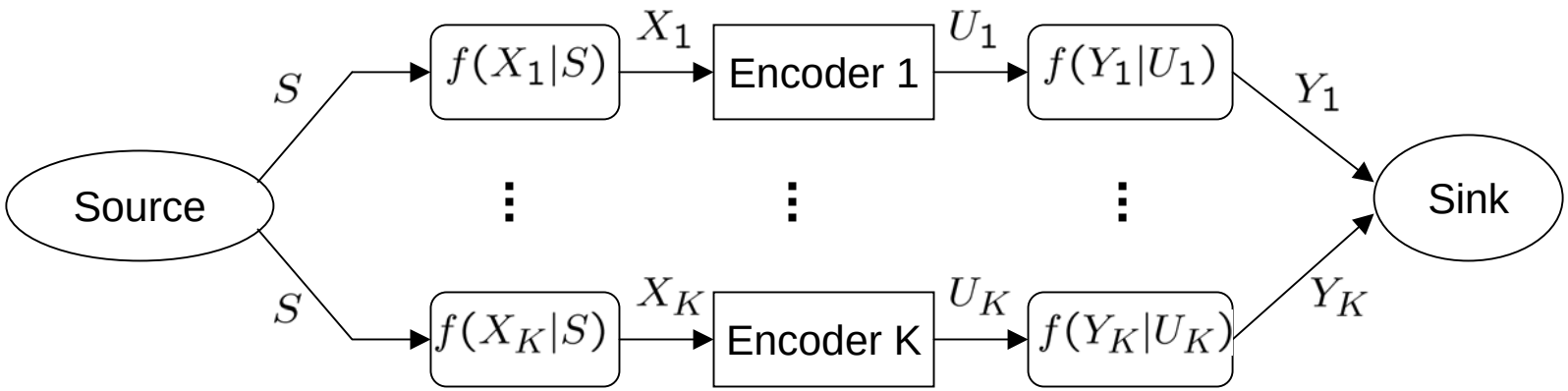

- Distributed encoder design for cooperative communications.
- Assume a finite-alphabet source (think packet transmission) !
  - Hence the use of minimum error probability criterion.
- Zero-memory encoding.

Extension to Cover/El Gamal relay channel is straightforward.

Motivation - When Are the Channels Useless?

- Using ergodic capacity is way too optimistic
  - Shannon's capacity result surely is great, that is, if you have the resources (and the patience) to get there.
  - Limit ourselves to zero delay signaling

- Consider the simple relay through serial BSCs $(\epsilon_n \leq 0.5)$

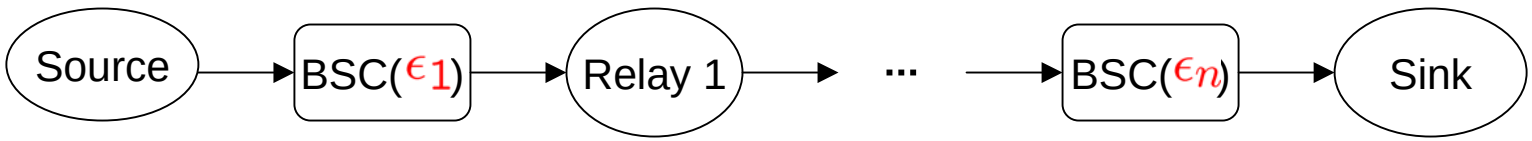

- Shannon says that the channels are useful as long as

$$\max\{\epsilon_n\} < 0.5$$

A Brain Teaser: When is a BSC useless

- If the source is binary with priors $P(X=0)=\pi_0$ and $P(X=1)=1-\pi_0$, and assume zero memory coding (no coding), when is the BSC useless?

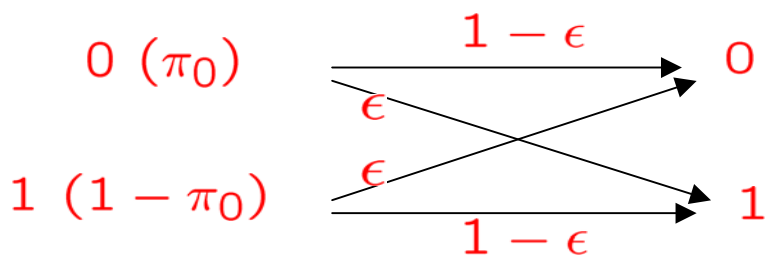

- Assume a minimum error probability criterion, the BSC is useless if

$$\epsilon \geq \min(\pi_0, 1-\pi_0)$$

- Using statistical inference jargon, this is when the prior dominates the likelihood function.

➢ How can we make the BSC channel useful again?

Outline

- Problem statement
  - When are the communications (channels) useless?
- The art of recycling
  - How to make useless channels useful again?
  - Fundamental performance limits due to the channels.
- How do we use the channels?
  - Collaborative signaling for sensory and ad hoc networks --- a clairvoyant study using joint source channel coding.
- Where do we go from here?

KEY: We assume a finite-alphabet source.

Sensory and *Ad hoc* Networks

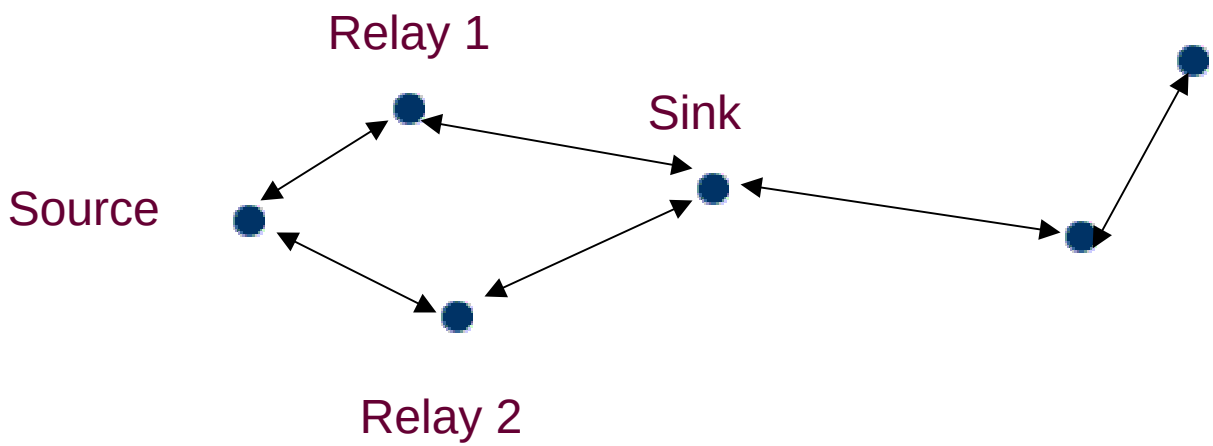

- If operating alone, neither Relay 1 nor Relay 2 may be useful because of the channel condition.
- Combined together, both channels may become useful again.

Some Formal Results

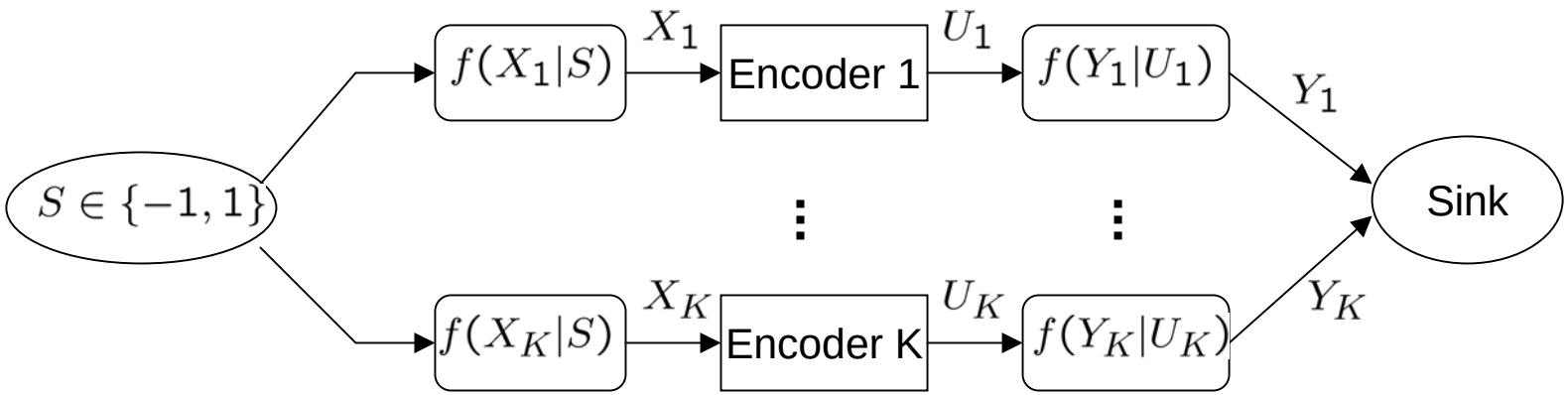

Understanding the fundamental performance limits due to the relay channels.

- Binary source;
- U_k is finite alphabet with alphabet size = D ($\log_2 D$ bits).
- Relay to sink has discrete channels specified by a channel transition matrix $\mathbf{M}$ with its entries being P(y|u);

Asymptotic Analysis (K! 1)

Theorem 1 *Assume that $X_1, \ldots, X_K$ are independent and identically distributed (i.i.d.) with distribution Q and the form of Q depends on the hypothesis: $Q = P_0$ with prior probability π_0 and $Q = P_1$ with prior probability π_1. The overall probability of error is denoted by $Pe^{(K)}$. Let*

$$C_c = \lim_{K \to \infty} \min_{\gamma} \left\{ -\frac{1}{K} \log Pe^{(K)} \right\}$$

Then the best achievable exponent (Chernoff Information) is

$$C_c = -\min_{0 \le s \le 1} \min_{\gamma} \log \left[\sum_{y=1}^{D} \left(\sum_{u=1}^{D} P(y|u) P_0(u) \right)^s \left(\sum_{u=1}^{D} P(y|u) P_1(u) \right)^{1-s} \right]$$

$C_c = 0$ if and only if $rank(\mathbf{M}) = 1$, i.e., all the columns of the transition matrix $\mathbf{M}$ are identical ($P(y|u) = P(y)$).

Interpretation and Remarks

- Rank one channel matrix has zero capacity!
  - The error exponent is zero if and only if the channel has zero capacity. (not that surprising anyway ☹)
- Kullback-Leibler distance can also be derived
  - Treating it as a hypothesis testing problem (Stein's lemma).
  - KLD=0 iff zero capacity.
- Infinite number of sensors makes up the for the zero memory constraint.
- What if we only have a finite number of sensors?
  - What is asymptotic anyway? 10, 100 or 100,000?

Non-asymptotic Analysis (Finite K)

- Analysis of the non asymptotic case is actually harder than the asymptotic case for distributed systems.
- We simplify analysis by assuming that a binary symmetric channel (BSC) with crossover probability ϵ is used between each relay and the sink node
- The channel matrix M can be obtained when m-bit messages are transmitted through m uses of the BSC.
- Again, restrict to zero memory encoder with minimum error probability criterion.

Non-asymptotic Analysis (Finite K)

Theorem 1 *For an K relay node system, there exists a threshold α_s, such that when $\alpha > \alpha_s$, system performance cannot be improved, i.e., the achievable error probability is simply $Pe = \min(\pi_0, 1 - \pi_0)$. Further, α_s is given by*

$$\alpha_s = \frac{\max_s f(s) - 1}{2 \max_s f(s) - 1}$$

where

$$f(s) = \frac{p'_d(s) - (\frac{\pi_0}{\pi_1})^{\frac{1}{L}} p'_f(s)}{1 - (\frac{\pi_0}{\pi_1})^{\frac{1}{L}}}$$

- Channels are not always useful even with non-zero capacity.
- Coupled with the asymptotic result (channels are always useful with non zero capacity), one expects that as K increases, the channel usefulness improves.

An Example

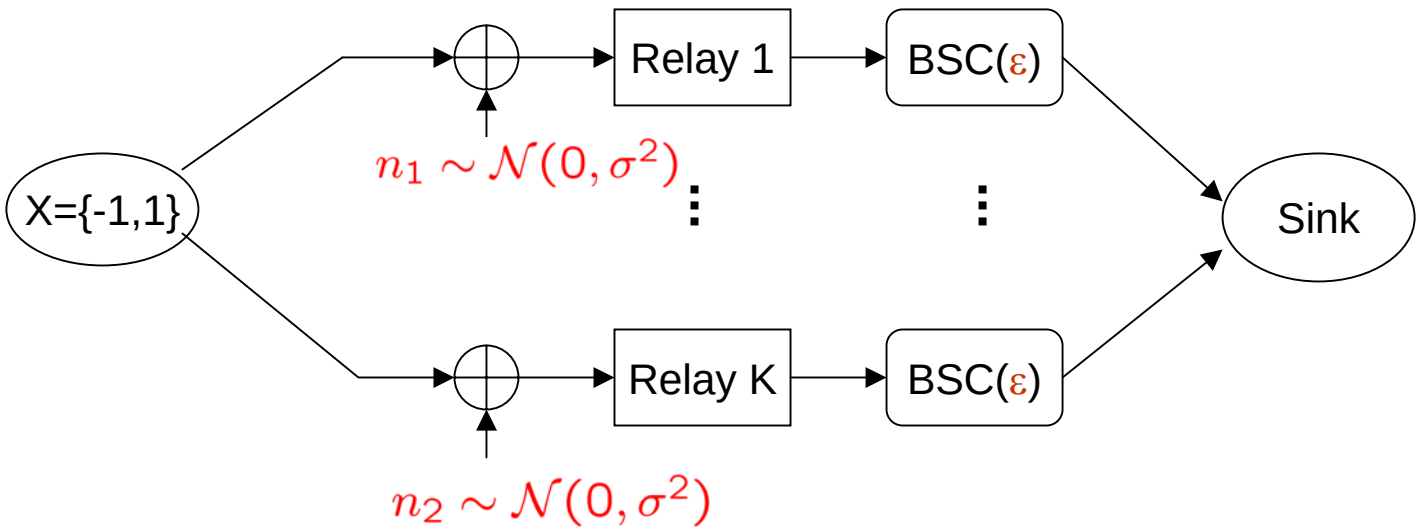

- Assume identical BSC, the channels may or may not be useful depending on the value of K!

Asymptotic Analysis

Chernoff Information

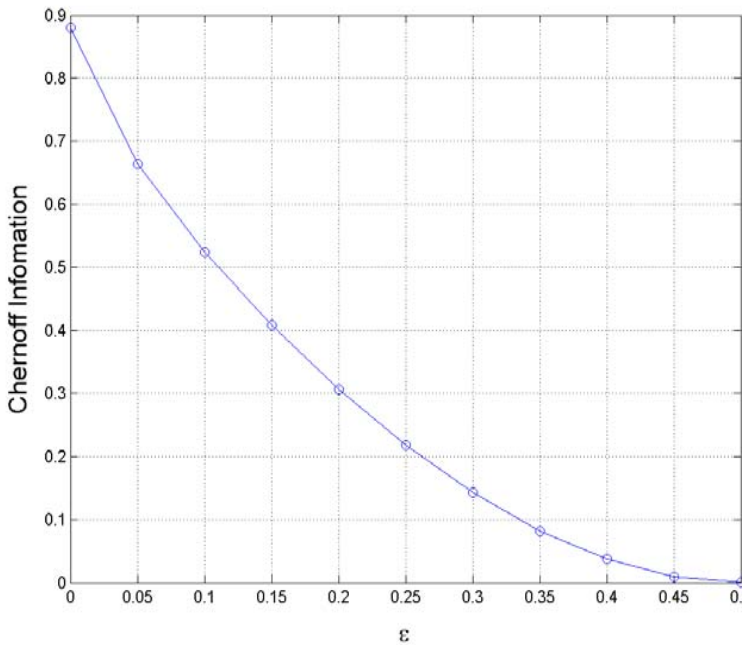

Kullback-Leibler Distance

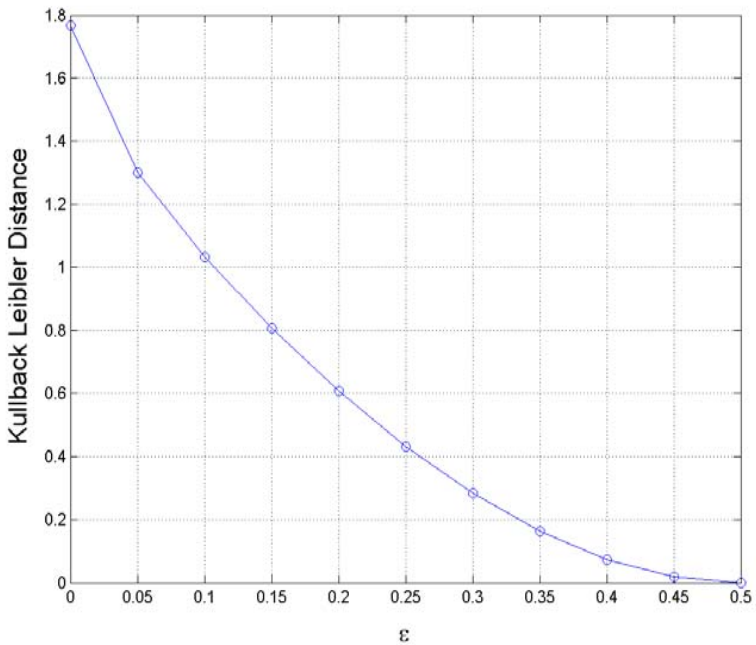

The Channel Usefulness (Uselessness) Figure

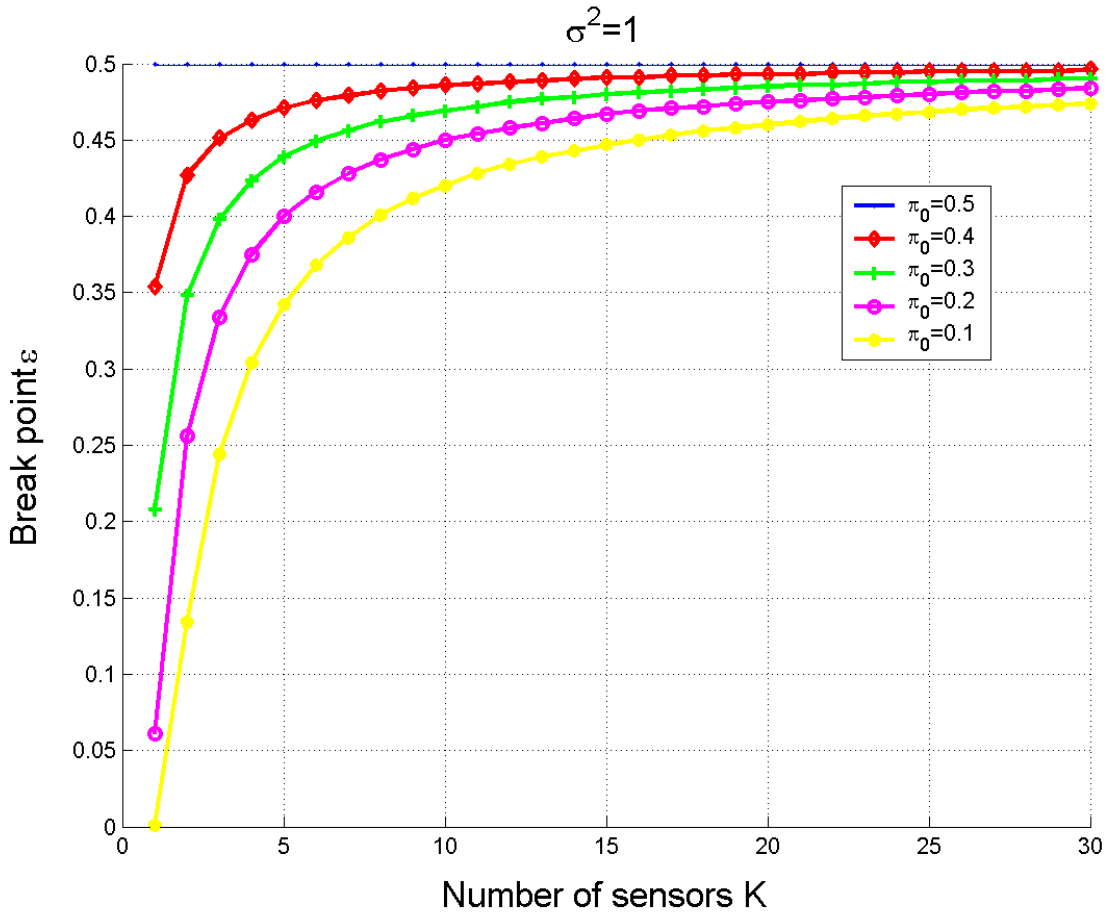

Observations

- With zero memory signaling, channel may be useless even if its ergodic capacity is non-zero
- Teamwork helps make useless channels useful again
- Asymptotically (the number of relay nodes goes to infinity), prior probability becomes not relevant – channels are always useful if they have non-zero capacity (spatial ergodicity).
- How do we encode at distributed nodes, each of them sees a different channel, for a finite number of nodes?

Outline

- Problem statement
  - When are the communications (channels) useless?
- The art of recycling
  - How to make useless channels useful again?
  - Fundamental performance limits due to the channels.
- How do we use the channels?
  - Collaborative signaling for sensory and ad hoc networks --- a clairvoyant study using joint source channel coding.
- Where do we go from here?

KEY: We assume a finite-alphabet source.

A Distributed Encoding (Signal Processing) Problem

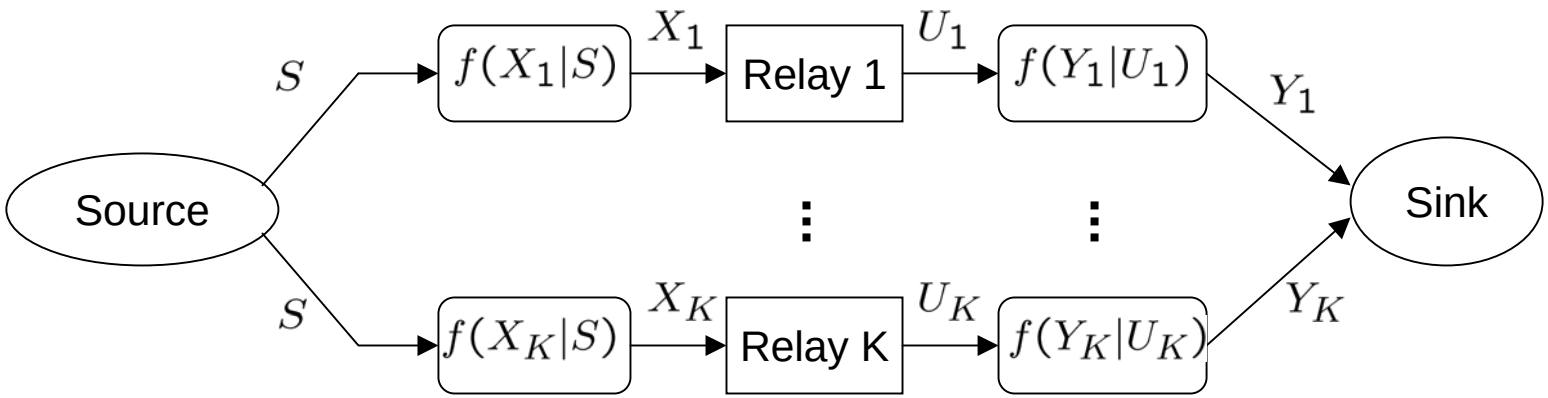

- Source is of finite-alphabet
  -- minimum error probability criterion.
- Zero-memory encoding.
- Distributed encoding across possibly heterogeneous channels!

A Clairvoyant Study

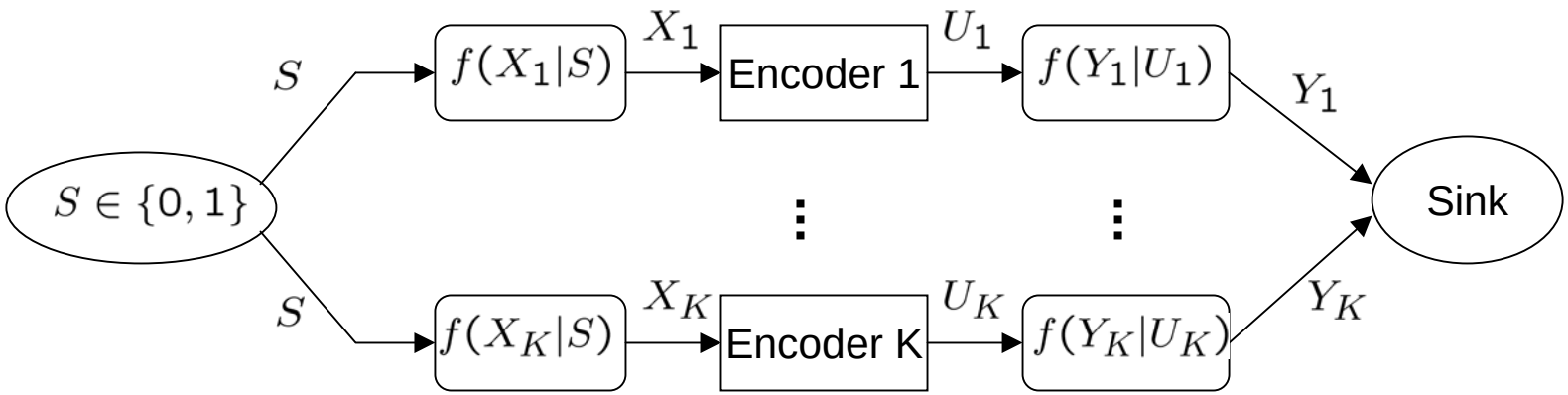

- Source S is binary.
- The global channel information is available to the designer.
  - Provides benchmark performance.
- Collaborative design – independent encoding.

A Distributed Hypothesis Testing Problem

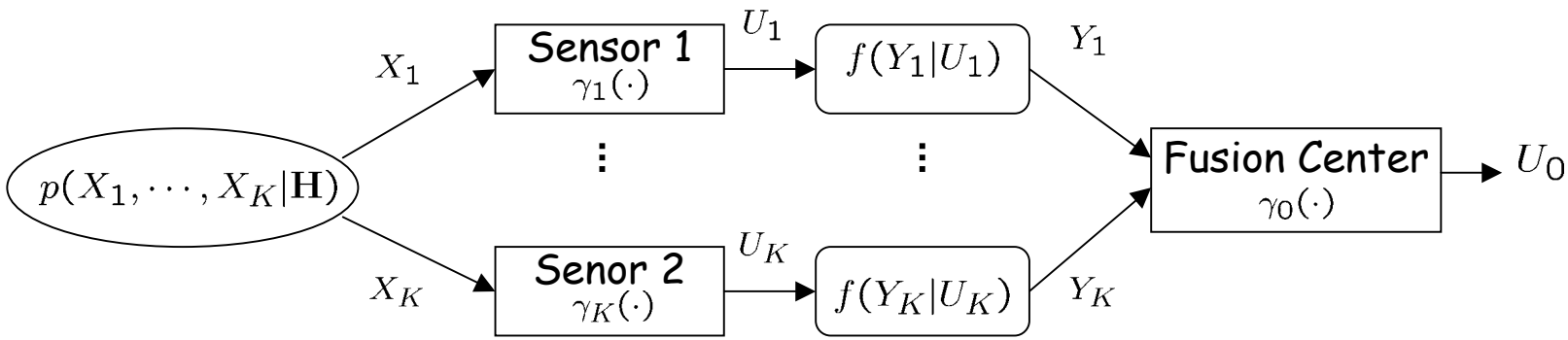

- H is binary.
- Conditional independence assumption

$$p(X_1, \cdots, X_K|\mathbf{H}) = \prod_{k=1}^{K} p(X_k|\mathbf{H})$$

- Different to classical distributed detection (HT) problem: transmission channel layer ($p(Y_1|U_1),\cdots,p(Y_K|U_K)$) is fully incorporated.

Binary Local Sensor (Encoder) Output

- With ideal transmission channels, likelihood ratio test (LRT) is optimal at local sensors.
  - Bayesian w/o a fusion center : Tenney & Sandell (1981)
  - With a fusion center: Hoballah & Varshney (1989)
  - NP criterion: Srinivasan (1986), Thomopoulos & Viswanathan & Bougoulias (1989), Tsitsiklis (1993), Blum (1996).
- In the presence of non-ideal transmission channels
  - Thomopoulos and Zhang (1992) : NP criterion with BSC.
  - Chen and Willett (2004) : Bayesian with general channel model.

Optimality of LRT at Local Sensors

Problem *Assume that local sensor decisions U_k's have to be transmitted through a vector channel $\prod_{k=1}^{K} f(y_k|U_k)$. For fixed fusion rule and all other local decisions, find local decision $\gamma_n(x_n)$ for the nth sensor that minimizes*

$$P_{e0} = \pi_0 P(U_0 = 1|H_0) + \pi_1 P(U_0 = 0|H_1)$$

where U_0 is the fusion output and π_0 and π_1 are priors

$$\pi_0 = P(H_0), \pi_1 = P(H_1)$$

- Solution Using person-by-person optimization (PBPO) criterion and assuming conditional independence of the local observations, one can show that the optimal local decision rules are LRT.
- More importantly, we established necessary condition for optimal decision rules that help find the LRT threshold.

When Should We Ignore the Channel Information?

- The special case of K=1?

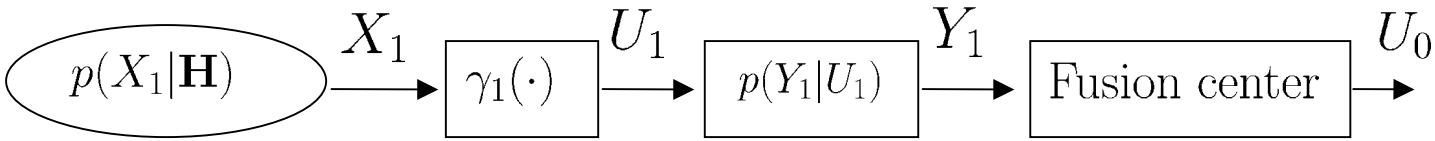

- Another brain teaser: what should one transmit with an ideal channel assumption, i.e., $Y_1=U_1$?
- With non-ideal channel, one can show that the optimal decision rule is the same Bayesian detector:

$$P(U_k = 1|X_k) = \begin{cases} 1 & \text{if } \frac{p(x_n|H_1)}{p(x_n|H_0)} > \frac{\pi_0}{\pi_1} \\ 0 & \text{if } \frac{p(x_n|H_1)}{p(x_n|H_0)} < \frac{\pi_0}{\pi_1} \end{cases}$$

- Thus, the optimal signaling is channel-blind for K=1!

Channel-Aware versus Channel-Blind

- Detection of a known signal in independent Gaussian noises.
- $K = 2$ sensors with prior probability $\pi_0 = P[H_0] = 0.8$
- BSC with crossover probability $\alpha_1 = 0.05$ and $\alpha_2 = 0.15$.

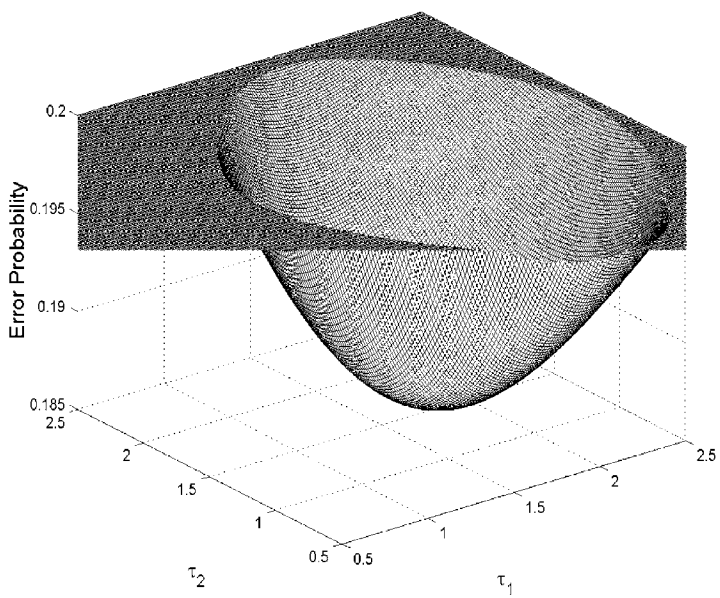

Mesh plot of error probability

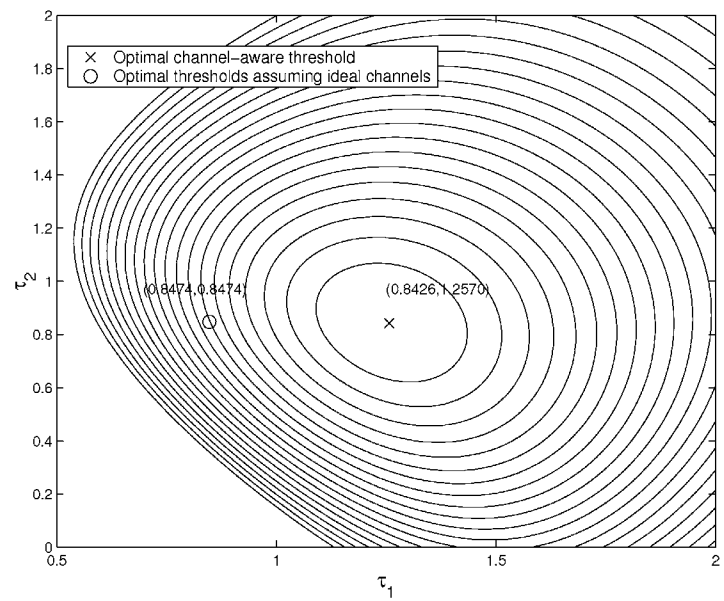

Contour plot of error probability

Distributed Joint Source-Channel Coding

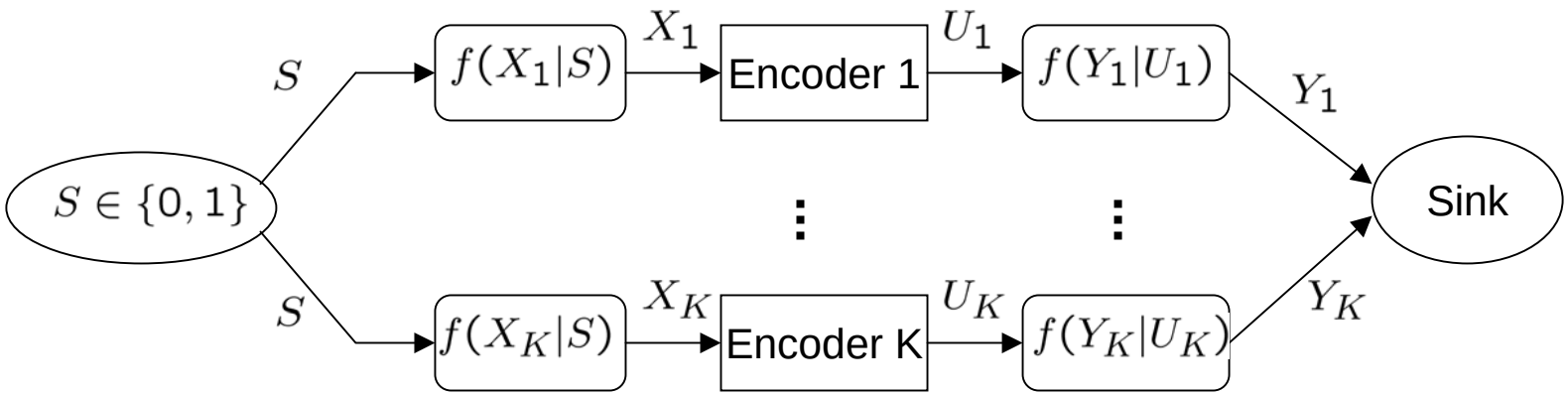

- Each codeword U_k is assumed to be of m bits.
  - Hence quantization level (codeword index set): $M=2^m$.
- Optimum decoding (fusion) rule $\gamma_0(¢)$ is assumed.

Optimality of Likelihood Ratio Quantizers

- Optimum sensor encoder is equivalent to a monotone LR partition.
- Generalizes the optimality of LR quantization in the absence of the channel layer in the distributed detection context.
  - Warren and Willett (1989, 1999)
  - Tsitsiklis (1993)
- Necessary conditions for optimality.
- How do we find the optimal quantization thresholds (encoder mapping)?

An Efficient Iterative Algorithm

- Establish the monotonicity in LR of the encoder output.
- Automatically distinguish the `good' and `bad' code index.
- PBPO iterative implementation.
- Validity verified by comparing to an exhaustive search approach (Longo&Lookabough&Gray:90 IT).

Farvardin & Vaishampayan (1986, IT)

– combined source quantization and channel coding.

Example 1 – Distributed Detection

- Detection of a known signal in Gaussian noise.
- Quantized sensor output sent through a BSC (m use of it).
- Two alternative approaches

  Approach A – channel blind approach.

  Approach B – separate source-quantization channel-coding.

  — An n-bit (n < m) quantizer followed by a block channel encoder mapping each n-bit quantizer output to an m-bit codeword. Total number of encoders: $\binom{m}{n}$.

Comparison

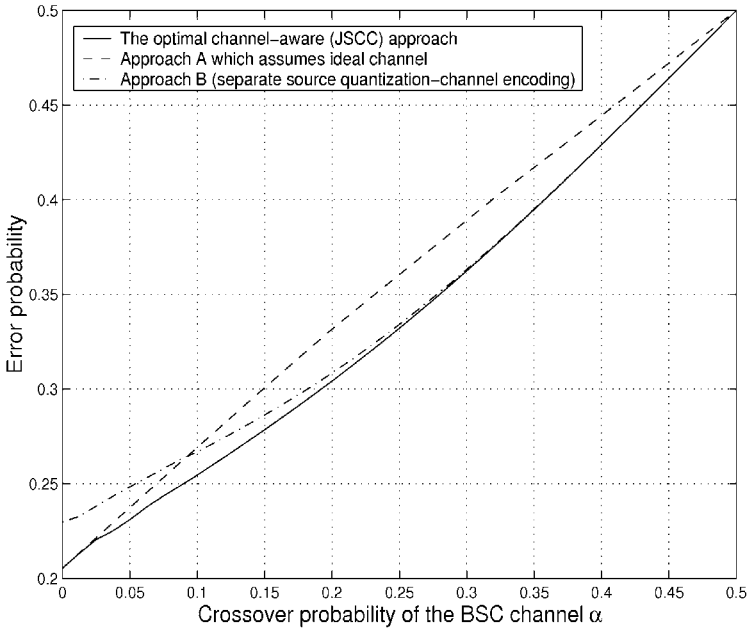

Error probability as a function of α

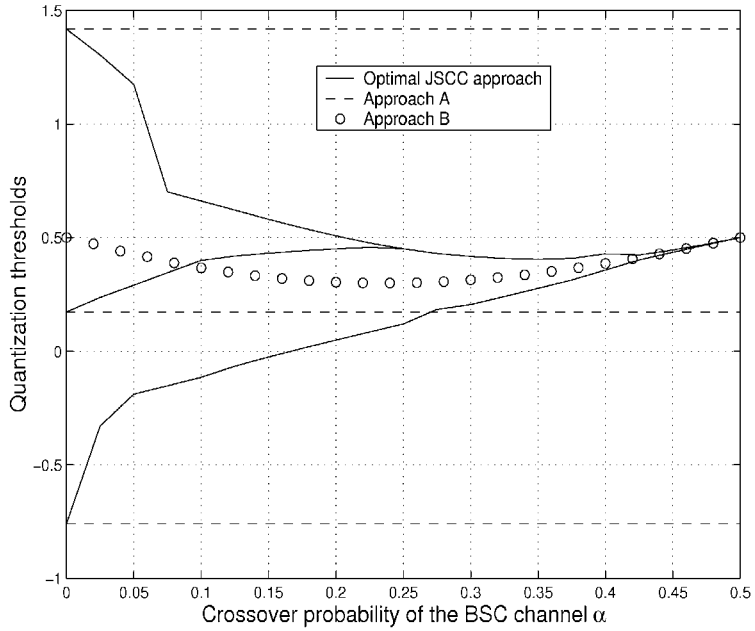

Thresholds of sensor quantizers

- H_1 and H_0 correspond to different mean values of Gaussian observations.
- $m = 2$, hence in general $M - 1 = 3$ thresholds are needed.
- $K = 3$ sensors with identical BSC with crossover probability α.

Example 2: Cooperative Relay in *Ad hoc* Networks

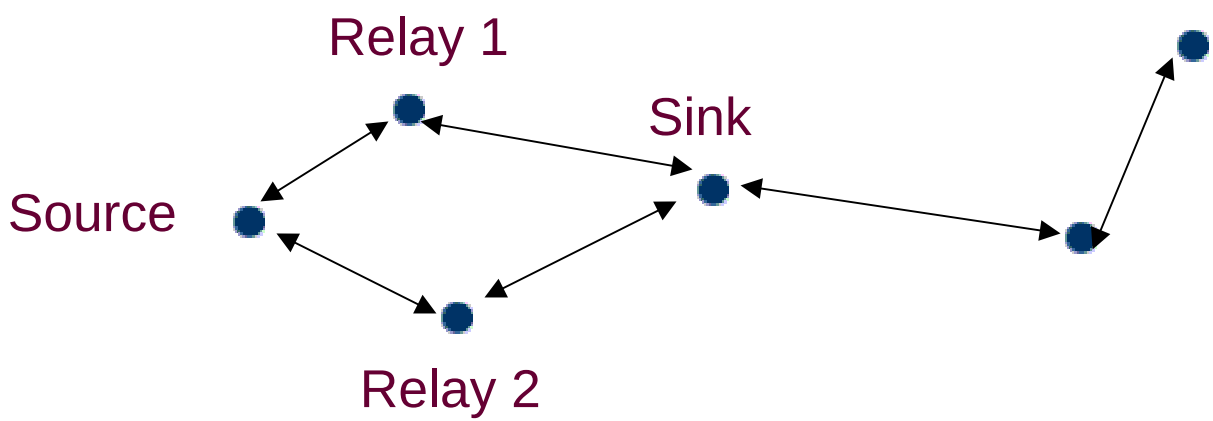

- Multiple nodes help out with each other for message relay
- Existing approaches
  - Distributed space-time codes (Laneman&Wornell,2003)
  - Protocol based diversity schemes (Laneman&Tse&Wornell)

    Amplifier-and-forward (AF), decode-and-forward (DF) …

A Comparison with AF and DF

- A simple repetition coded packet relayed through multiple nodes with flat fading channels.

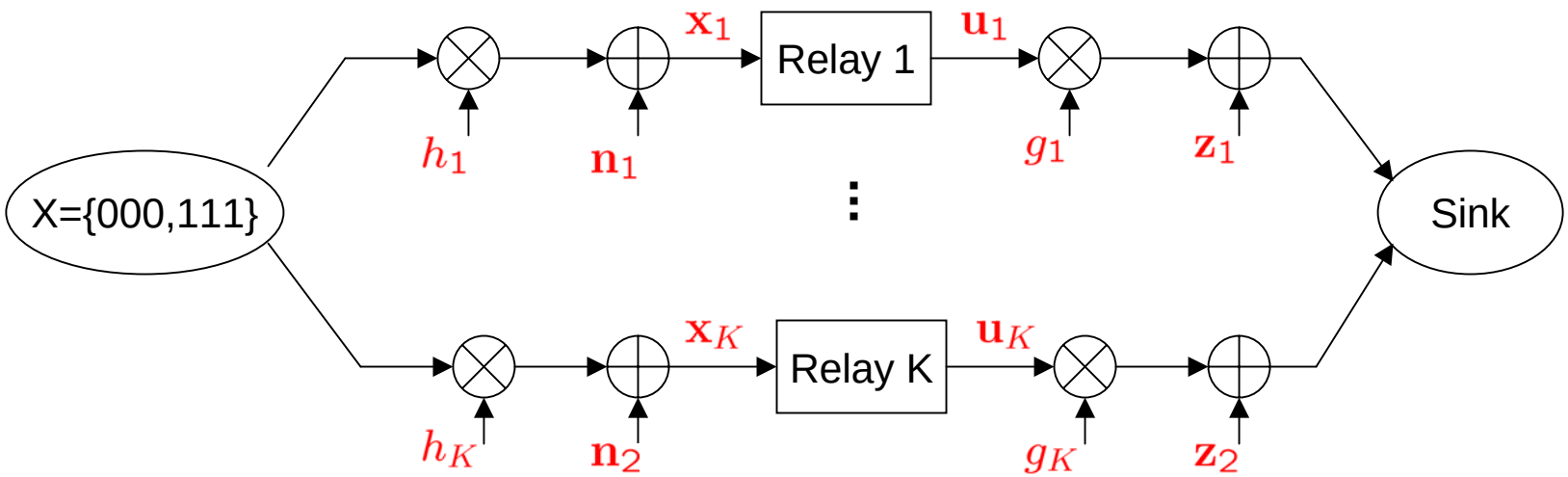

AF: $\mathbf{u}_k = \beta \mathbf{x}_k$

DF: $\mathbf{u}_k \in \{000, 111\}$

JSCC: $\mathbf{u}_k \in \{000, 001, 010, 011, 100, 101, 110, 111\}$

Error Probability Comparison

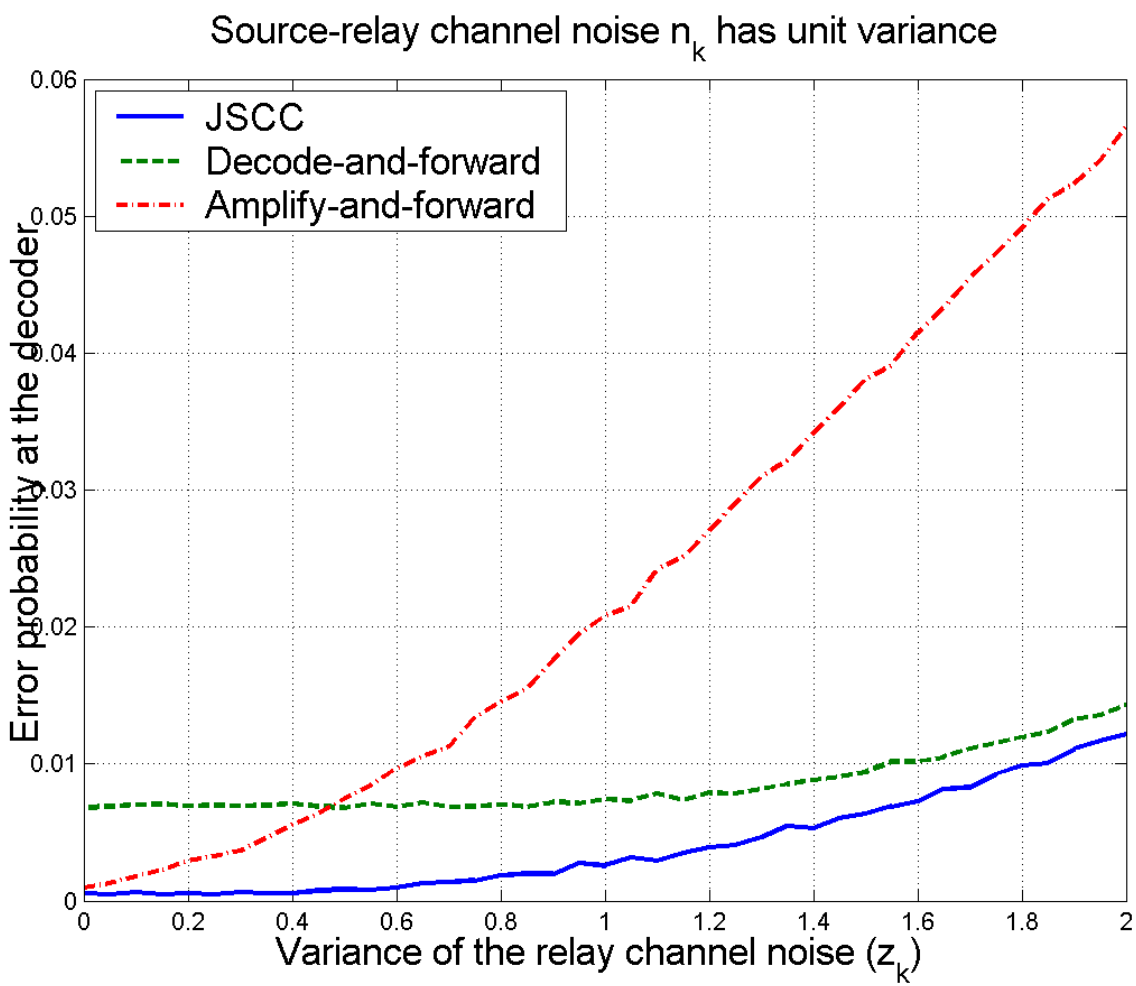

Remarks

- Person-by-person optimal.
  - Multiple initializations may be needed.
- Channel-awareness of the encoder design.
- Encoding process is reminiscent to Slepian-Wolf coding
  - ❑ Independent encoding at distributed nodes.
  - ❖ Binary source with error probability criterion – not for recovery of distributed and correlated data.
  - ❖ Our distributed encoding imposes zero delay.

Outline

- Problem statement
  - When are the communications (channels) useless?
- The art of recycling
  - How to make useless channels useful again?
  - Fundamental performance limits due to the channels.
- How do we use the channels?
  - Collaborative signaling for sensory and ad hoc networks --- a clairvoyant study using joint source channel coding.
- Where do we go from here?

KEY: We assume a finite-alphabet source.

Some Remaining Questions (Cont'd)

- Heterogeneous channels
  - When shall we stop using the `bad' channels?
- A clairvoyant study (approach)
  - Provide benchmark performance
  - Practically more feasible (distributed) design?
- MAC with bandwidth constraint
  - In the current study, cooperation gain is at the cost of bandwidth as we assume orthogonal channels.
  - Given a fixed channel bandwidth, does cooperation help? What about its limiting performance (nicely tied up with the sensor censoring idea in distributed detection).

Some Remaining Questions (Cont'd)

- What if we go beyond two hops for collaborative relay?
  - Architecture?

  - Signaling design.

Summary

- Channels are useful/useless depending on how one uses them.
- Spatial diversity helps enhancing channel usage.
- Distributed encoding is in essence a signal processing problem.
- Finite-alphabet property holds the key.

QUESTIONS? (Done torturing, ready to be tortured …)